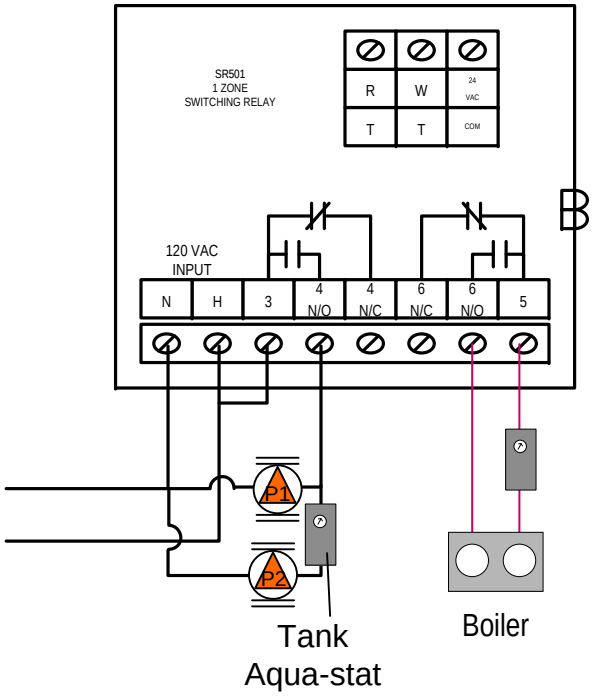

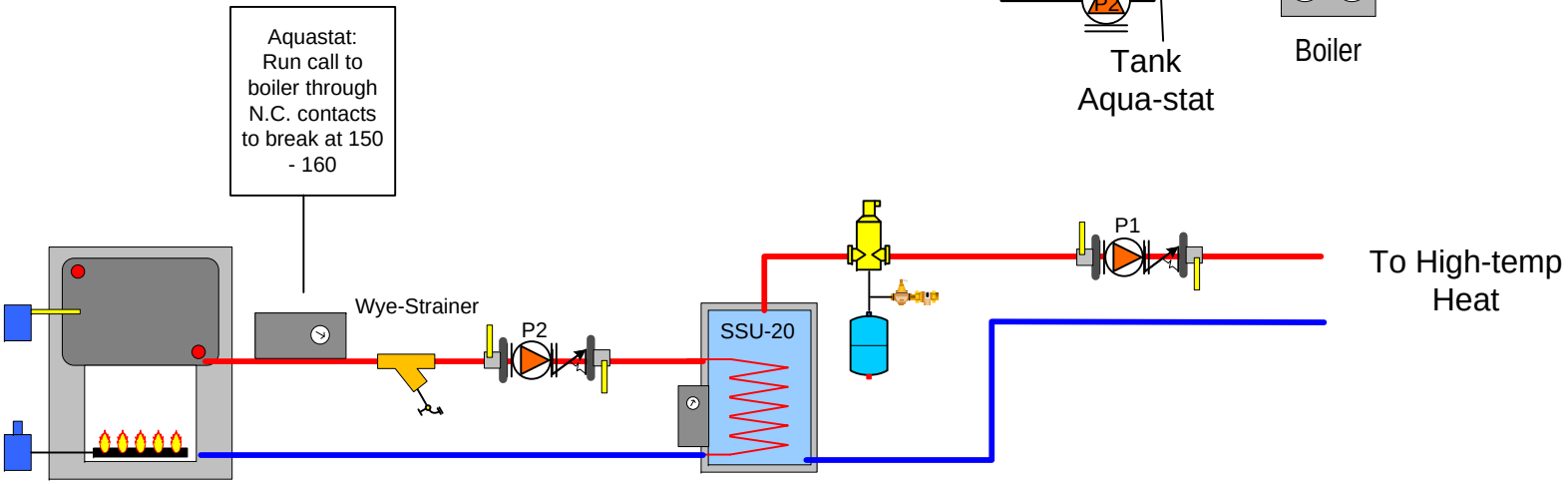

Steam Boiler
Take Supply and
Return tappings off
below water line

HEAT EXCHANGER
NEEDED TO ALLOW
FOR PRESSURIZED
RADIANT SIDE

CAPCO
ENERGY SUPPLY, INC.
781-721-0303 FAX 781-721-9119 WWW.CAPCOSUPPLY.COM
10 INDUSTRIAL PARKWAY
WOBURN MA 01801

HIGH-TEMP OFF OF STEAM
BOILER

NLC
3.4.10

THIS IS ONLY A CONCEPT DRAWING. ALL CONDITIONS AND NECESSARY COMPONENTS MUST
BE FIELD VERIFIED AND ARE THE RESPONSIBILITY OF THE INSTALLING CONTRACTOR